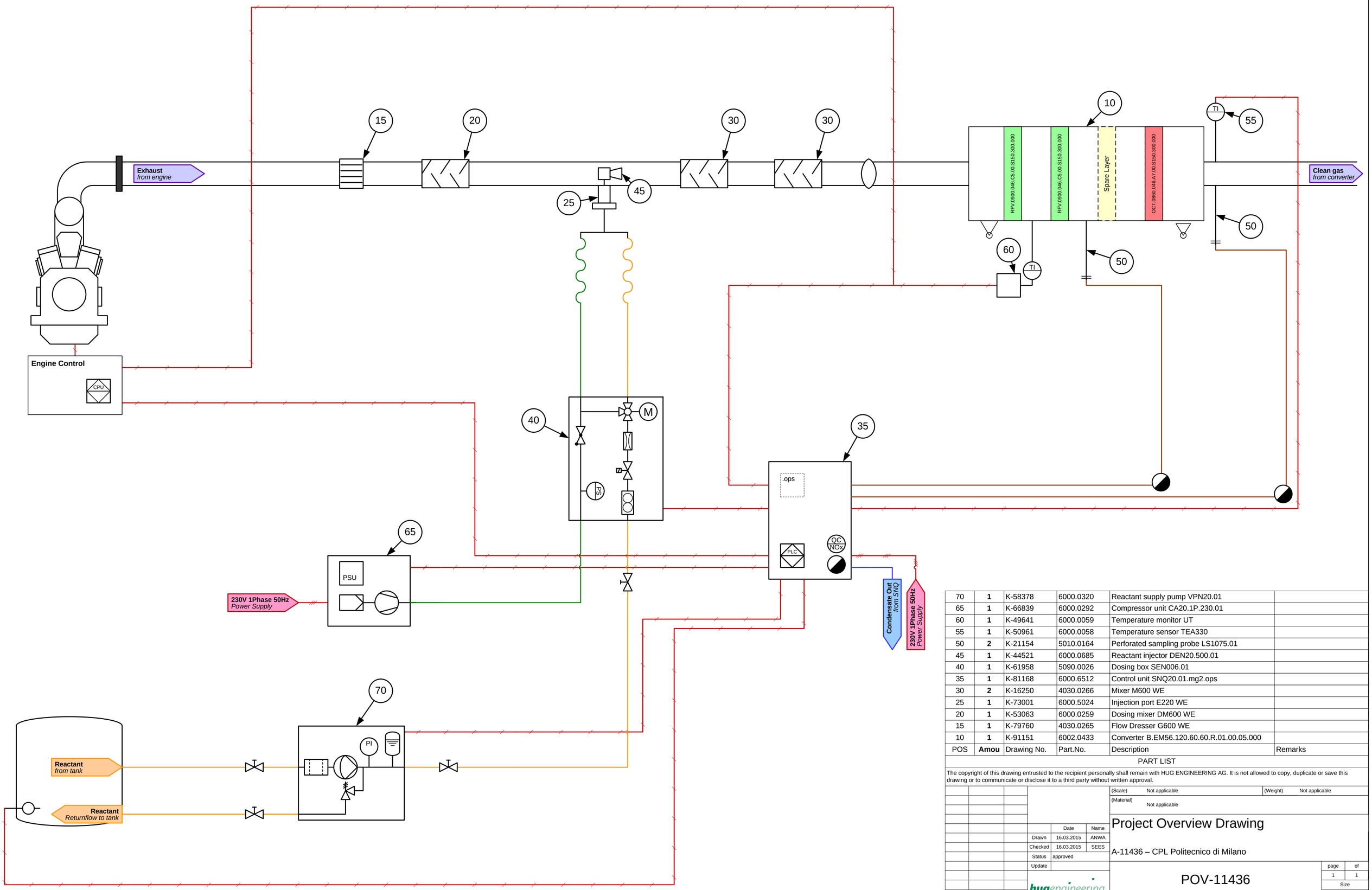

POS	Amou	Drawing No.	Part.No.	Description	Remarks
70	**1**	K-58378	6000.0320	Reactant supply pump VPN20.01	
65	**1**	K-66839	6000.0292	Compressor unit CA20.1P.230.01	
60	**1**	K-49641	6000.0059	Temperature monitor UT	
55	**1**	K-50961	6000.0058	Temperature sensor TEA330	
50	**2**	K-21154	5010.0164	Perforated sampling probe LS1075.01	
45	**1**	K-44521	6000.0685	Reactant injector DEN20.500.01	
40	**1**	K-61958	5090.0026	Dosing box SEN006.01	
35	**1**	K-81168	6000.6512	Control unit SNQ20.01.mg2.ops	
30	**2**	K-16250	4030.0266	Mixer M600 WE	
25	**1**	K-73001	6000.5024	Injection port E220 WE	
20	**1**	K-53063	6000.0259	Dosing mixer DM600 WE	
15	**1**	K-79760	4030.0265	Flow Dresser G600 WE	
10	**1**	K-91151	6002.0433	Converter B.EM56.120.60.60.R.01.00.05.000	

PART LIST

The copyright of this drawing entrusted to the recipient personally shall remain with HUG ENGINEERING AG. It is not allowed to copy, duplicate or save this drawing or to communicate or disclose it to a third party without written approval.

(Scale) Not applicable (Weight) Not applicable

(Material) Not applicable

	Date	Name
Drawn	16.03.2015	ANWA
Checked	16.03.2015	SEES
Status	approved	
Update		

Project Overview Drawing

A-11436 – CPL Politecnico di Milano

POV-11436

page 1 of 1

Size A2

hugengineering. A Company of the ElringKlinger Group

Rev.	Date	Name

Replacement for Document Replaced by Document